LOCKFORMER

Model 16
Instructions & Parts Diagram

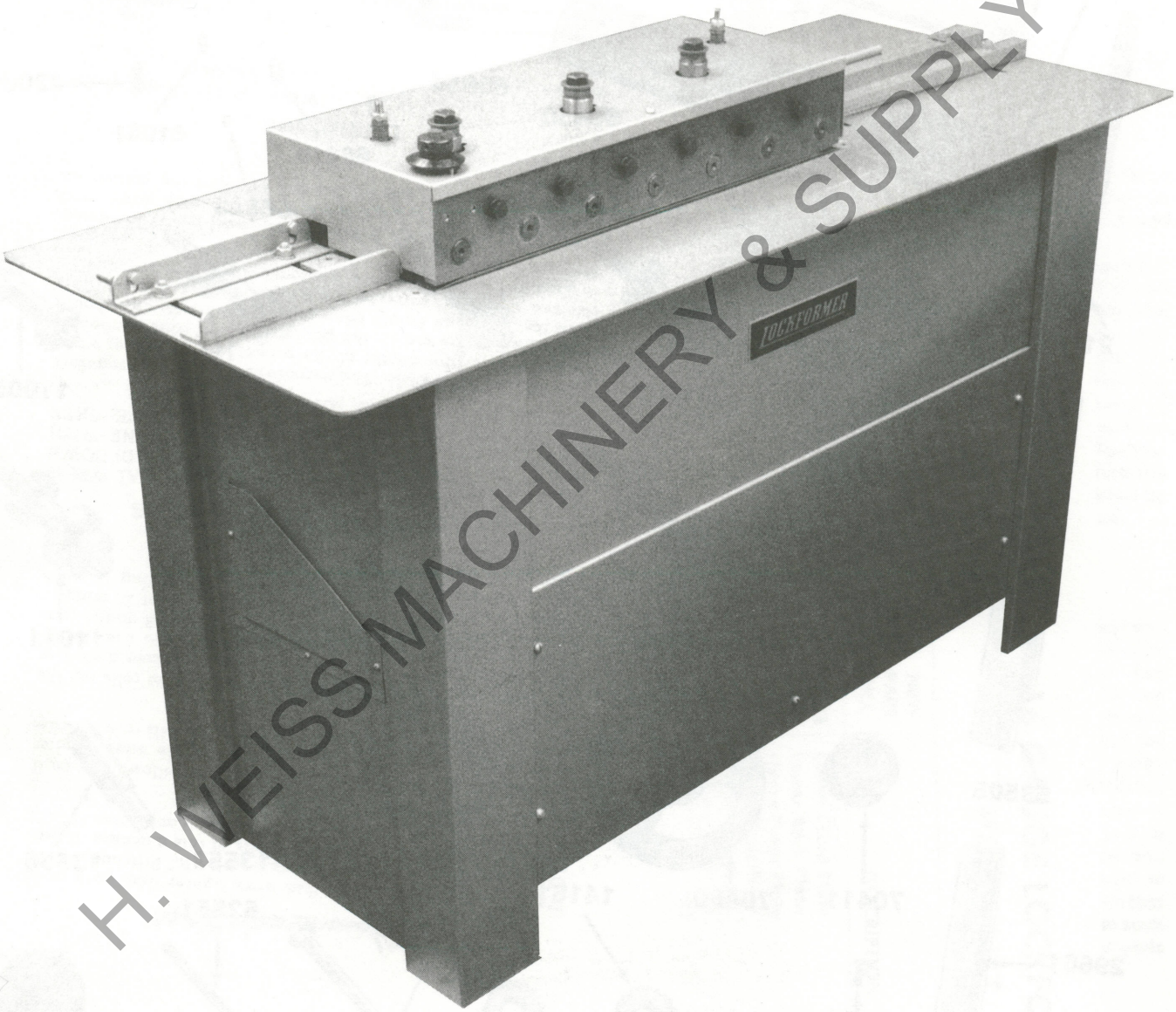

LOCKFORMER

Where the Machines of Tomorrow are Made Today℠

Recommendations

We recommend that shops that work lighter iron, such as is used on smaller pipes and fittings employ 5/16” Pittsburgh Lock Rolls mounted on the extended shafts of this machine. If production warrants, our smaller machine (Lockforrner 22”) should be installed.

The reason for this recommendation is as follows:
As most hand brakes cannot be used to form a single edge smaller than 3/8” on heavy iron our Lockforrner = 16 rolls a 1/2” pocket with the permanent rolls.

The lighter iron can be worked in the permanent rolls but the closing down of the lock over the 1/2” span causes distortion of the material.
We, therefore, suggest that you use the 5/16” Pittsburgh Lock auxiliary rolls on 22 gauge to 28 gauge iron. These rolls may be installed or changed in about 20 minutes by an experienced operator and the lock resulting is much more accurate and neat,

Operating Instructions

VERY IMPORTANT! TO SET THE CALIBRATED DIAL FOR 16 AND 18 GAUGE, TURN DIAL (RIGHT HAND THREAD) DOWN TO THE BOTTOM WITH THE LETTER “S” IN LINE WITH THE ARROW MARKED ON COVER OF MACHINE. THEN RELEASE TO SETTING OF MATERIAL TO BE USED.

THE CALIBRATED DIAL: The purpose of this dial is to regulate the width (not the depth) of the pocket. For example, when forming 16-gauge metal, the pocket must be wide enough to take the 16-gauge single edge which fits into it; and should become narrower correspondingly, for lighter gauges. This is done by setting the dial to whatever gauge you are running through the machine.

Should the dial get out of adjustment, re-set by:

(1) loosening the set screw,
(2) turning the stud all the way down,
(3) setting the “S” mark on the dial opposite the pointer on the cover.

Example:

If the dial is set for 16 ga. the lock is wide, 3-1/16 far from rolls.

When set for 24 ga. it becomes narrow, 3 closer from rolls

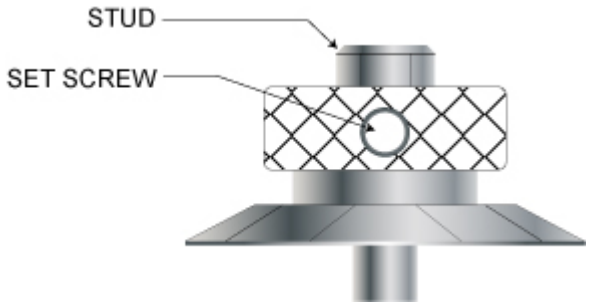

Turn CALIBRATED DIAL all the way down and then back to gauge of metal to be run through the machine. Hold material against the angle gauge and slide it into the forming head. Be sure to hold the material to the gauge.

Your Lockforrner has been adjusted at the factory, but on account of the difference in materials in various localities it is sometimes necessary to readjust it. Proceed as follows:

(1) If material slips or sticks on leaving forming head, tighten Hold Down Stud at finishing end slightly.

(2) If the material works away from the feed gauge tighten Hold Down Studs at starting end until it corrects itself.

(3) If the material shows heavy pressure marks, loosen Hold Down Studs slightly.

If a wider or narrower hammer-over edge is desired, move the angle gauge forward or back. Be sure to keep the gauge parallel with the front edge of the tap plate of the machine.

MATERIAL SHOULD NOT TOUCH GAUGE ON FINISH END OF MACHINE.
It is very important that long sheets be held flat and against the angle gauge when starting through the forming head.
The Lockforrner 18 will handle pieces 8" and longer. If shorter length is required, NOTCH LONG LENGTH AND CUT AFTER FORMING.

Lubrication

There are seven alemite fittings located on the underside of the stand roller case on the auxiliary side of the machine. These fittings lubricate the main reduction bearings and should be lubricated after every four hours of operation.

Recommended lubricant:
Standard Viscous #3 (Product of the Standard Oil Company) or equivalent. The slow speed shafts do not require additional lubrication. Grease gears periodically or as needed. If machine is to be used out of doors, an oil or grease film will prevent rusting of surfaces.

To install supplementary rolls, proceed as follows:

1. Remove top cover.

2. Remove rear section of top plate. This will expose the extended shafts on which the rolls are to be mounted.

3. Select the first pair of rolls, which are marked “T1” and “B1” and slip them on the shafts at the left, or feed side of the machine, placing “T1” on the upper shaft and “B1” on the lower. Repeat this procedure with rolls T2 and “B2”, ‘T3” and “B3” etc., until all rolls have been mounted. All rolls marked “T” should be mounted on the top shafts and “B” rolls on the bottom shafts, in numerical order, reading from left to right, facing the shafts. NUMBERED SIDE MUST FACE OUTWARDS.

4. Install keys and fasten rolls to shafts with capscrews and special washers which are provided.

5. Mount entrance and exit gauges onto stand using slotted holes provided in stand table top. Set entrance gauge by placing a straight edge along the outer edge of the auxiliary rolls, Measure in from this straight edge to the extreme ends of entrance gauge bar the required amount. See Sketch (1). When using the Drive Cleat Rolls the straight edge is placed along the entrance gauge and the measurement is made from the distance between the straight edge and the number one and seven roll stations.

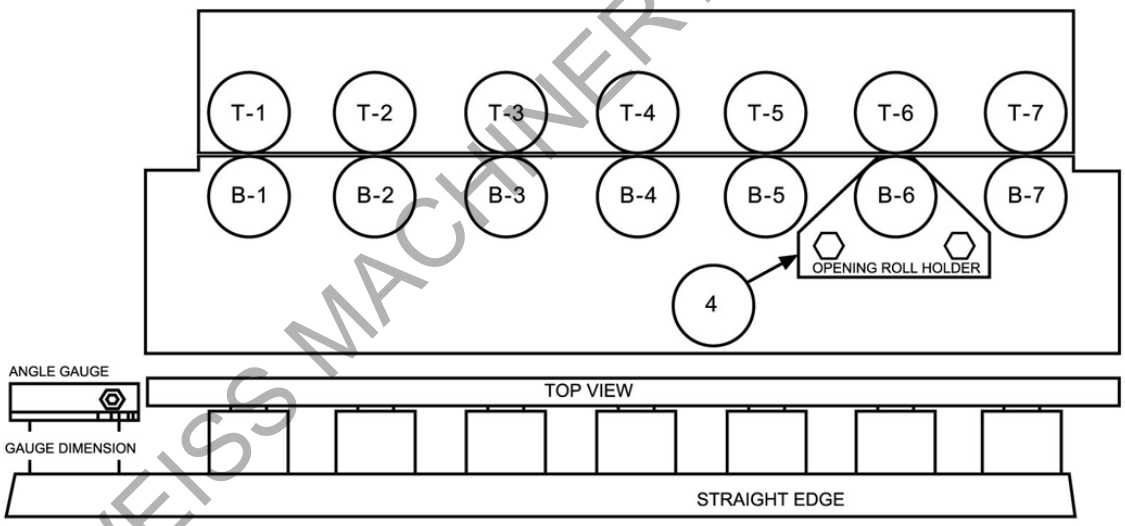

SKETCH No.1

Auxiliary roll gauge settings

A. **Type "S" Double Seam:** (22-26 Gauge) 5/16" Pocket. Uses approximately 1" material.
Gauge setting……1-1/8"

B. **Type "L" Double Seam:** (16-20 Gauge) 7/16" Pocket. Uses approximately 1-1/8" material.
Gauge setting……1-5/16"

C. **Standing Seam Rolls:** (16-20 Gauge) 3/4" Height. Uses approximately 2-1/8" per completed seam. Forms both single and double edge by simple gauge attachment. Note: Two piece entrance gauge supplied. Drilled bar mounted to stand with clips attached, to form standing seam.
Gauge setting…….. 2"
Second Gauge edge bar snaps under clips and is used for right angle flange.

See Sketch below: (2)

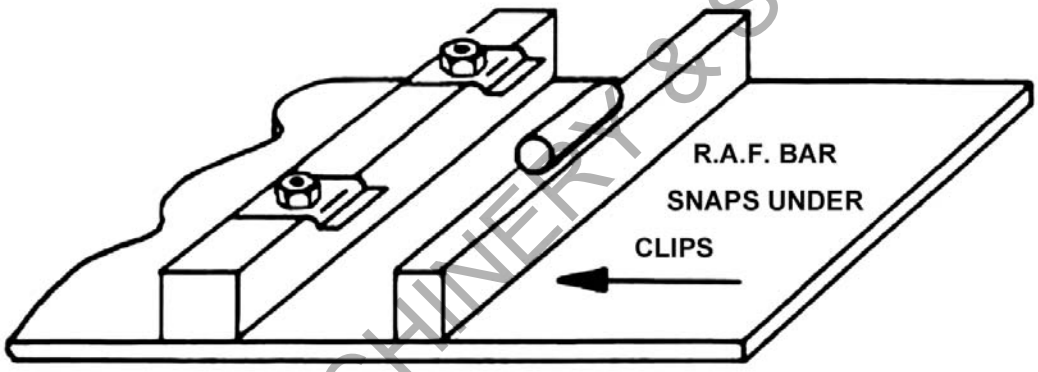

SKETCH No. 2

The top seven roll is not fastened by bolt and washer but allowed to float.
The exit angle gauge has an adjustable bar that can be lowered to exert pressure on the material as it emerges from the rolls, thereby straightening the finished section.

See Sketch (3) below: Set exit gauge to the standing seam shape.

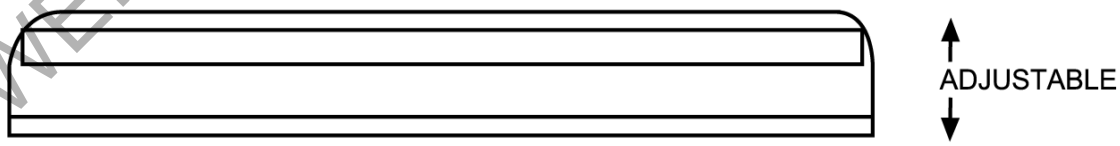

SKETCH No. 3

D. **Right Angle Flange Rolls:** (16-24 Gauge) on straight pieces only. Adjustable to 7/16" high.
Gauge setting……1-5/16"

E. **5/16" Pittsburgh Lock Rolls:** (22-26 Gauge) 5/16" Pocket.
Gauge setting……..1-11/16"
To install auxiliary opening roll holder remove rolls, from the number six roll station and bolts that straddle bottom six roll shaft (See Sketch 4 and 4A). Place opening roll holder onto machine and fasten with the two ½"-13 NC x 2" HHCS provided.

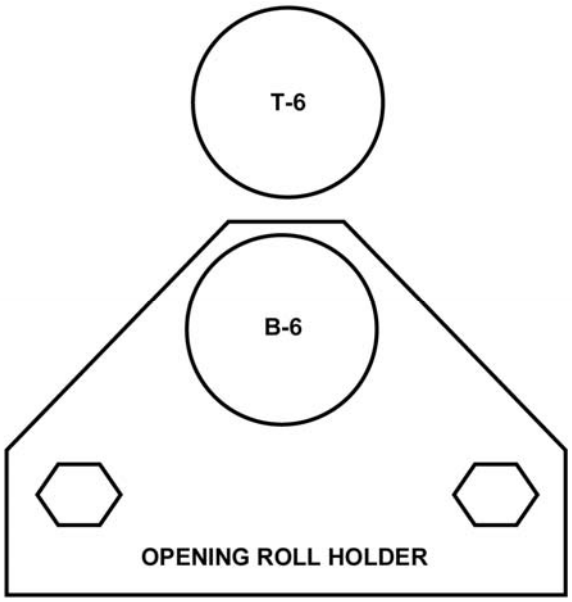

SKETCH No. 4

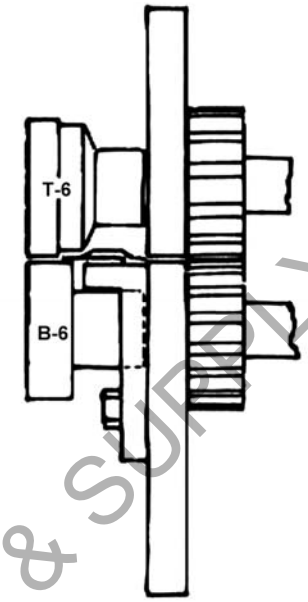

SKETCH No. 4A

F. **Drive Cleat:** (20-26) Gauge Material) Cleat width, 1-1/8", 2-1/8" stock width.
Gauge setting (See Sketch No. 5)…….. 1" to 1-/32"
Note: The top =3 roll is not fastened by bolt and washer but allowed to float.

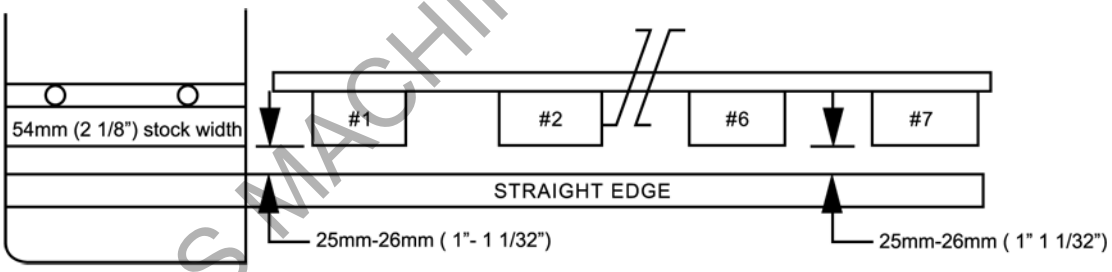

SKETCH No. 5

G. **Combination 3-in-1 Rolls:** (22-28 Gauge) Uses approximately 1-3/4" on "T" Section 1-1/8" on standing seam ½" on right angle flange.

Three Step Entrance Gauge
Top Step "T" Section Gauge setting……..2-1/16"
Middle Step Standing Seam
Gauge setting……1-1/2"
Bottom Step Right Angle Flange
Gauge setting……15/16"

Note:
When the First setting is made the other two will be automatically correct The other two shapes can be made by placing material to the proper gauge step.
There are two top seven rolls, one stamped T-7, 22-24 gauge which has a wide slot and should be used with 22 and 24 gauge material. The second roll is stamped T-7, 26-28 gauge and should be used for the lighter materials. The exit angle gauge has an adjustable bar that can be lowered to exert pressure on the material as it emerges from the rolls, thereby straightening the finished section. (See Sketch 3).

Caution: When adjusting exit gauge be sure it is set to the "T" section shape or damage will result by material interference with the gauge bar.

Note:
When changing rolls, loosen the exit gauge and move it to the extreme end of the table slots, away from where the material will pass. Run a test piece of material through the rolls and stop machine as the lead edge of the formed material reaches the end of the exit table.
Set exit gauge to the formed material; the gauge should be set flush to, but not bearing against, the material unless side pressure is required for straightening. Adjustment of the tension on the 3/8" studs that pass through the plates will affect the shape and tendency of material to hold to the entrance gauge.

It is important: that when changing rolls all parts pertaining to each set be removed from the machine and all parts included on assembly.

6. Replace top cover and back plate

7. Hold material against gauge and feed into machine.

16-Gauge Lockformer Assembly

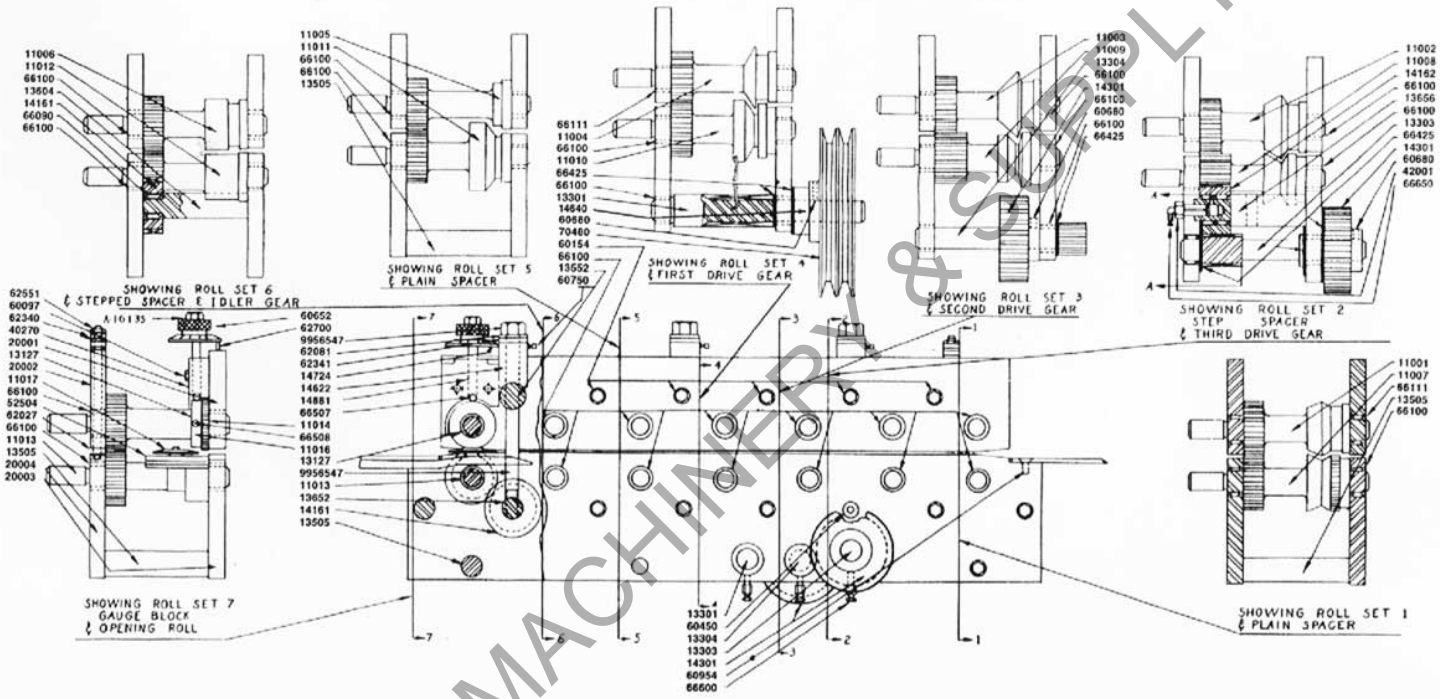

When Ordering Parts Be Sure to Include the Serial Number of Your Lockformer

29601	Exit Gauge	1
21454	Entrance Gauge	1
9956547	Hex. Head Stud Assembly	1
62551	3/8—16 x 6-1/2 Stud	2
60954	1/2—13 x 1 F.H. SCS	4
11017	Opening Roll	1
*62341	5/8 Blvl. Washer	24
62081	5/8 x 3/16 Washer	3
*62340	3/8 Blvl. Washer	24
62700	4 x 1 Tpr. Pin	2
62402	15 Woodruff Key	4
*58505	Stand Assembly	1
29469	Motor Base	2
80103	Motor Control	1
*80328	N28 Htr. Element	3

*39511	Cover Assembly	1
14301	Drive Gear	2
13301	First Drive Shaft	1
13303	Third Drive Shaft	1
13304	Second Drive Shaft	1
62027	3/8 x .082 Washer	2
66425	TT-1709 1 Thrust Bearing	7
*60680	3/8—16 x 3/8 Slotted Set Screw	2
60750	1/4—20 x 1/2 Sq. Hd. Set Screw	3
80071	3 HP 3 60 36 145 Motor	1
61120	3/8—16 Hex Nut	6
80104	Flush Plate	1
61300	3/8—16 Jam Nut	2
60875	3/8—16 x 1 Carriage Bolt	10
80422	BX Cable 12 3 66	1

*85156	Lockformer Name Plate	1
*60795	4 x 3/16 Drive Screw U CAD	8
66600	886L Fem. Coupling	7
66610	888L Half Union	7
32902	Lubrication Connector Holder	1
66650	Angle Body Lubrication	1
66700	Nyla Tubing 4 x 15"	60"
66700	Nyla Tubing 3 x 19"	57"
60877	3/8—16 x 1-3/4 Carriage Bolt	2
62364	1/2 Lock Washer	33
60000	1/4—20 x 1/2 Hx. Hd. Cap Screw	2
61061	1/4—20 Hex Nut	2
62029	3/8 x 1/16 Washer	16
*60551	1/4—20 x 1/2 RHMS	4
*60048	5/16—18 x 1-1/4 Hx. Hd. C. Screw	4

*60575	10—24 x 3/8 RHMS	4
*60652	5/16—18 x 1/2 Slotted Set Screw	1
*60593	10—32 x 7/16 FLMS	2
*60953	3/8—16 x 1 F.H. SCS	2
*61040	10-24 Hex Nut	4
*61101	5/16—18 Hex Nut	4
*62010	5/16—1-1/16 Washer	8
*62362	5/16 Lock Washer Medium	4
*80484	BX Connector 3/4	1
*80483	BX Connector 3/8	1
*80602	Rg. Tng. Terminal	3
*80928	Back Enclosure	1
*85178	Lockformer Logo	1

*NOT ILLUSTRATED

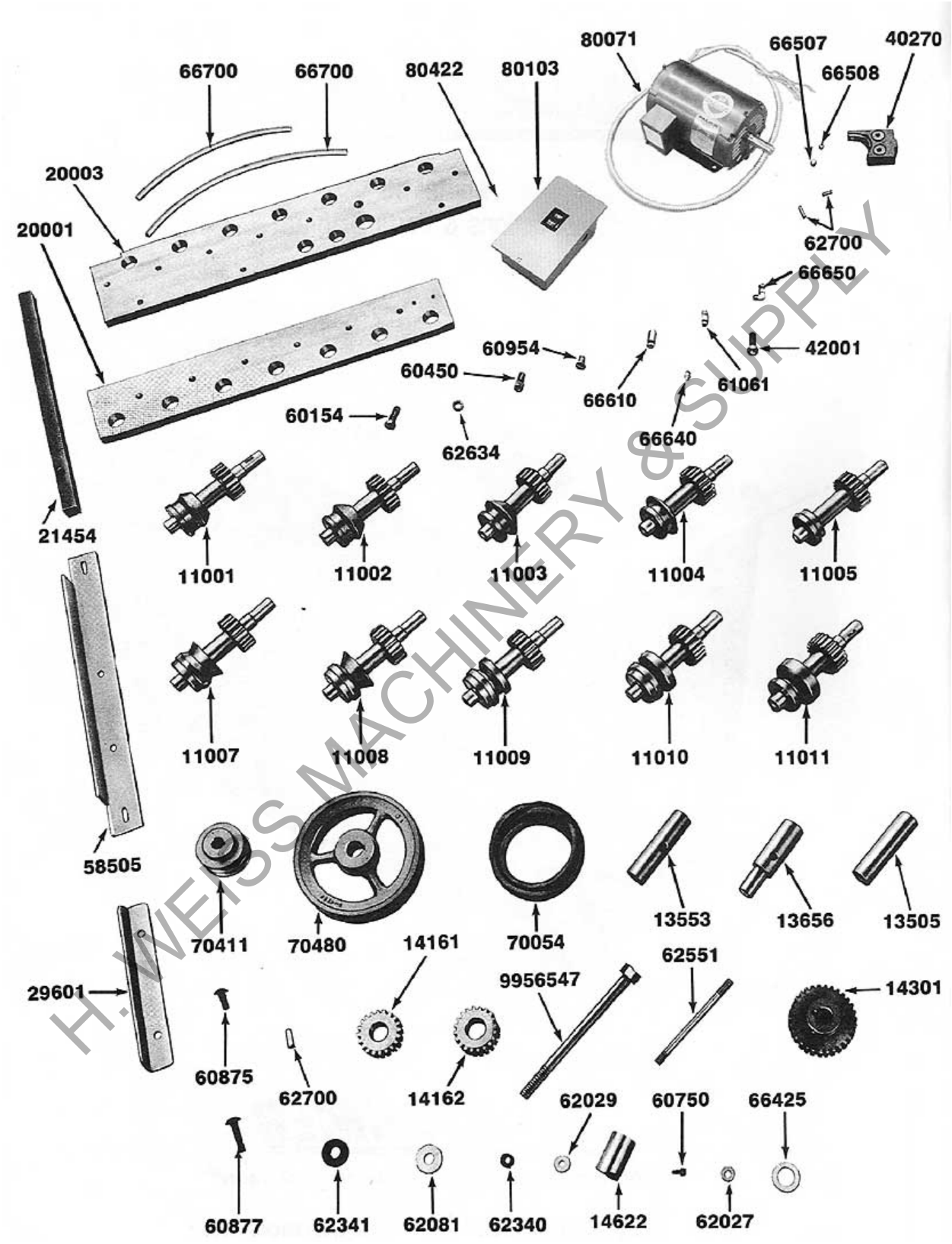

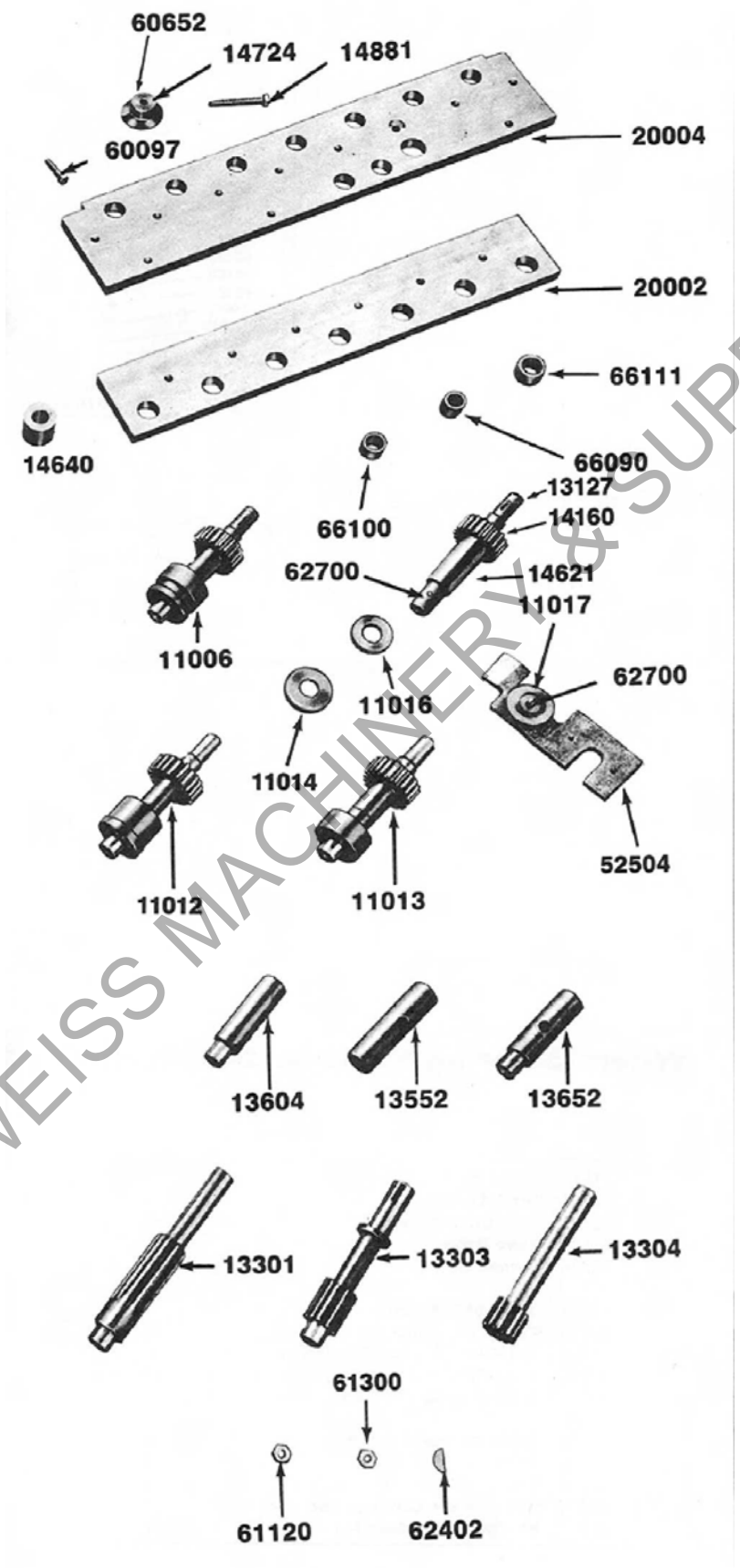

Lockformer Pittsburgh 16 Gauge

Parts List

Please use New Number when ordering parts.

New Part No.	Description	Pieces per Unit
20003	Lower Front Plate	1
20004	Lower Back Plate	1
20001	Upper Front Plate	1
20002	Upper Back Plate	1
11001	16 Pitts T1	1
11002	16 Pitts T2	1
11003	16 Pitts T3	1
11004	16 Pitts T4	1
11005	16 Pitts T5	1
11006	16 Pitts T6	1
13127	T7 Roll Shaft	1
14621	16 Pitts Cir.	1
14160	Drive Gear	1
11014	Knurled Ring	1
11016	Plain Ring	1
14724	Adjustable Dial	1
60652	Set Screw	1
42700	Dual Pin	1
*71018	Comp. Spring	1
60097	3/8 16 x 1-3/4 HHCS	2
40270	Adjusting Block Fin.	1
66507	1/2 Steel Ball	1
66508	3/8 Steel Ball	1
14881	Adjusting Dial Screw	1
11007	16 Pitts B1	1
11008	16 Pitts B2	1
11009	16 Pitts B3	1
11010	16 Pitts B4	1
11011	16 Pitts B5	1
11012	16 Pitts B6	1
11013	16 Pitts B7	1
70411	2 BK 28 7 & 8 Sheave	1
70480	2 BK 80 HX. 1 Sheave	1
70054	5L-520 Belt	2
13552	Spacer Dr. off Center	2
13553	Spacer Dr. on Center	1
13652	Idler Spacer off Center	2
13656	Main Idler Spacer	1
13404	Idler Spacer Plain	3
13505	Plain Spacer	8
66100	B1612 Torr. Bearing	30

*66101	B1612 OH Torr. Bearing	4
68111	HJ 1624 12 Torr. Bearing	2
66090	B1416 Torr. Bearing	5
66040	1610 Grease Fittings	7
37000	Greese Fitting Shim	1
60154	½-13 x 1-1/2 Hex Hd. C Screws	32
42001	Lube Bolt	1
14161	Idler Gear (Uses 1- #66090 Bearing)	5
14162	Main Idler Gear (Uses 2- #66100 Bearings)	1
*62633	3/8 x 1 Dowel Pin	2
*51900	Fibre Gear Assembly	1
*52504	Opening Roll Bracket Assembly	1
14622	Saddle Washer	3
60450	½-13 x 1 SHCS	1

Lockformer 3-in-1 Clinch Collar Entrance Gauge Chart

Part #52908 – Entrance Gauge for 8900/Triplex Cleaformer and 20 Gauge Snaplock
(12-13/16" Long with 8" Bolt Hole Centers)

Part #52916 – Entrance Gauge (NEW STYLE) for 16 Gauge / 18 Gauge Pittsburgh
(20" Long with 14" Bolt Hole Centers)

Part #52914 – Entrance Gauge (OLD STYLE) for 16 Gauge / 18 Gauge Pittsburgh
(10" Long x 6-3/8" Bolt Hole Centers)

Part #52501 – Entrance Gauge for 8 Station Cleatformers (8000 & 8600) – ***OBSOLETE***
(10" Long x 5-3/8" Bolt Hole Centers)